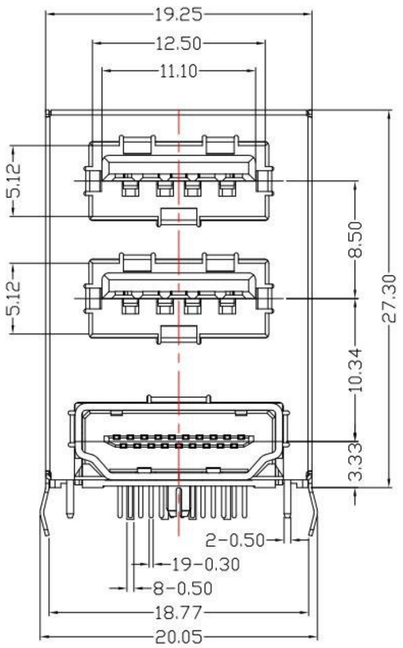

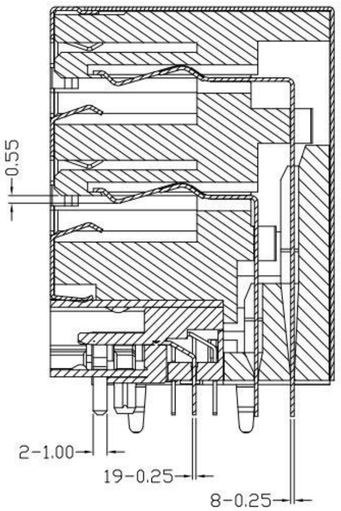

SEC:A-A

HDU2-270H-x-S373

COLOR :

White : W
Black : B

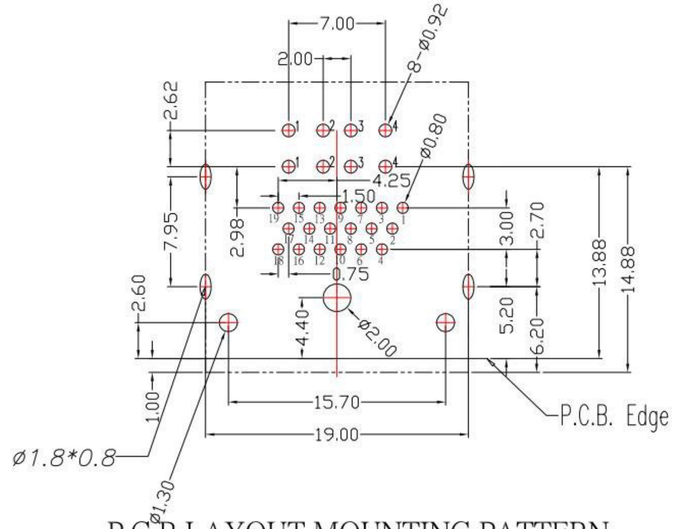

P.C.B LAYOUT MOUNTING PATTERN

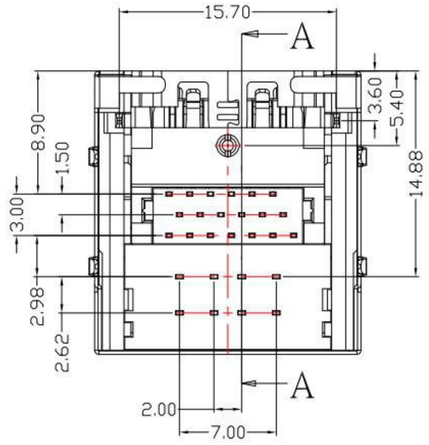

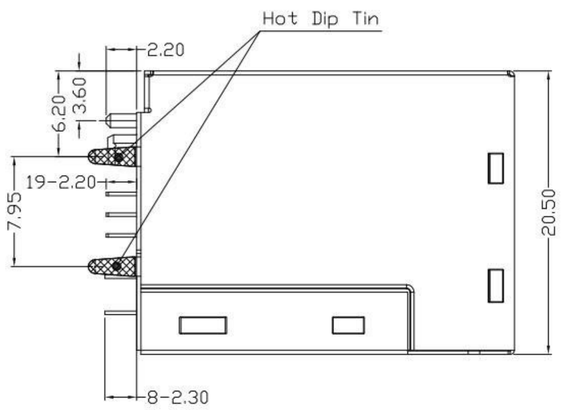

SPECIFICATIONS

1. USB
   - 1.1 Voltage: 250 VAC(RMS) Max.
   - 1.2 Current Rating: 1.5 Ampere per Pontact
   - 1.3 Contact Resistance: 30 Milliohms Max.
   - 1.4 Insulation Resistance: 1000 Megohms Min.
   - 1.5 Dielectric Withstanding Voltage: 750 VAC(RMS)
   - 1.6 Total Mating Force: 3.57 Kgf Max.
   - 1.7 Total Unmating Force: 1.02 Kgf Min.
   - 1.8 Operating Temperature: −55°C to +85°C
2. HDMI
   - 2.1 Voltage: 40 VAC(RMS) Max.
   - 2.2 Current Rating: 0.5 Ampere per Contact
   - 2.3 Contact Resistance: 30 Milliohms Max.
   - 2.4 Insulation Resistance: 100 Megohms Min.
   - 2.5 Dielectric Withstanding Voltage: 500V DC(RMS)
   - 2.6 Total Mating Force: 4.5 Kgf Max.
   - 2.7 Total Unmating Force: 1.0 Kgf Min.
   - 2.8 Operating Temperature: −55°C to +85°C

NOTES

1. MATERIAL:
   Housing(USB):PBT
   Housing(HDMI):LCP
   Terminal:Brass.
   Shell(USB):SUS.
   Shell(HDMI):SUS.
2. FINISH:
   Terminal:Gold Plated over Nickel at Conatct Area.
   Tin Plated over Nickel at Solder Area.
   Shell(USB):Nickel Plated.
   Shell(HDMI):Nickel Plated.

ITEM NO.	DESCRIPTION	DRAWN	DATE

KSD SWITCH CONNECTOR 全球互联零组件制造企业 科斯达电子科技有限公司 KSD ELECTRONIC TECHNOLOGY CO., LTD

TOLERANCE UNLESS OTHERWISE STATED : Up to 5 ±0.2; Above 5 ~ 15 ±0.3; Above 15 ~ 30 ±0.4; Above 30 ~ 50 ±0.5; Angle ±0.3°

3RD. ANGEL'S | UNITS MM

DRAWN BY: Jack Lu	DATE 05/17/22	MAT'L	
CHECKED BY: Jacky Chen	DATE 05/17/22	FINISH	
APPROVED BY: Tony Kao	DATE 05/17/22	SCALE	1 : 1
		SHEET NO.	1 of 1

TITLE	CONNECTOR		
MODLE	雙層 USB 2.0 AF + HDMI AF 90 度 DIP TYPE		
DWG NO.	HDU2-270H-x-S373	SIZE	A4
PART NO.	HDU2-270H-x-S373	VER	R