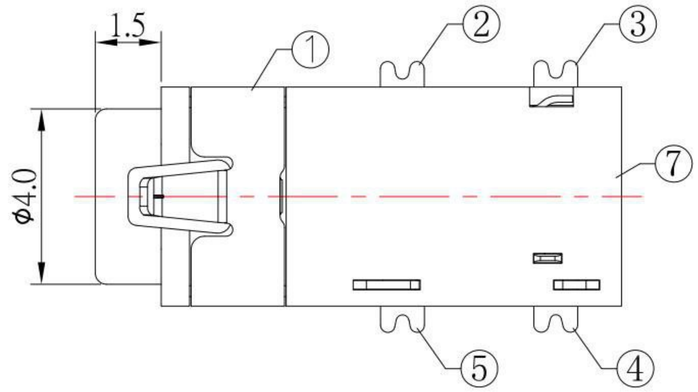

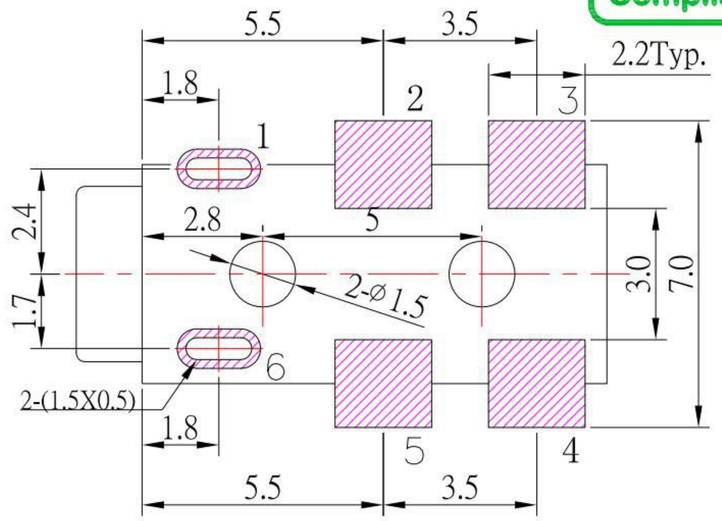

P.C.B LAYOUT MOUNTING PATTERN
(TOP VIEW)

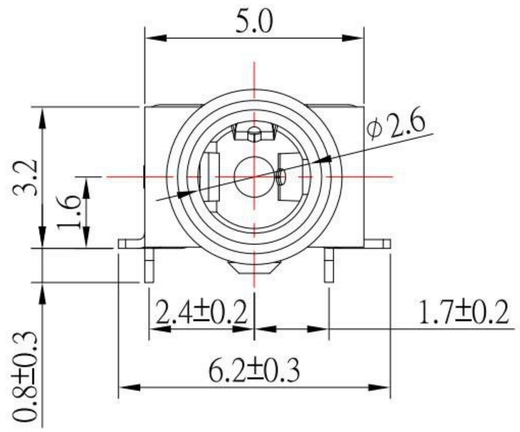

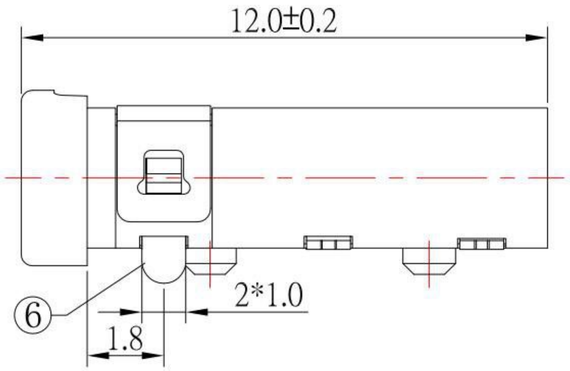

SCHEMATIC

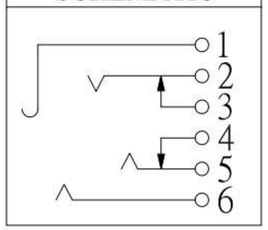

SPECIFICATION

1.Rating: DC 30V, 1.0A
2.Contact resistance: ≤50mΩ
3.Insulation resistance: ≥100MΩ
4.Withstand voltage: 500VAC
5.Insertion and extraction force: 3-20N
6.life test: 5,000 cycles

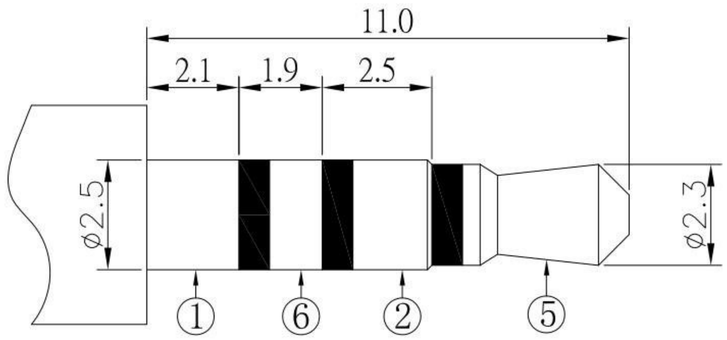

ø2.50mm 4 POLE PLUG

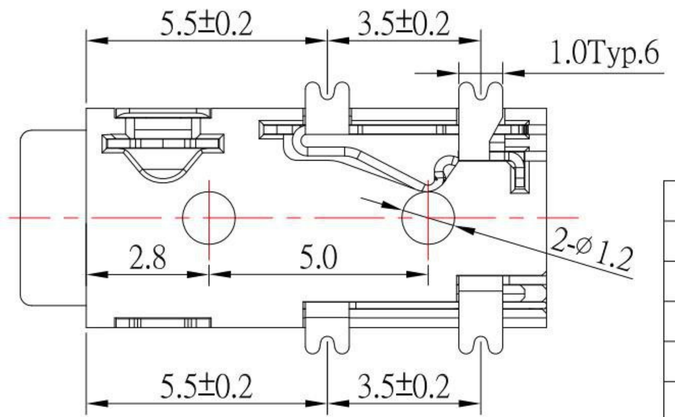

NO.	DESCRIPTION	QTY	MATERIAL	REMARK
⑦	HOUSING	1	PA9T	
⑥	CONTACT FOOT #6	1	Phosphor Bronze	Au-Plated
⑤	CONTACT FOOT #5	1	Phosphor Bronze	Au-Plated
④	CONTACT FOOT #4	1	Phosphor Bronze	Au-Plated
③	CONTACT FOOT #3	1	Phosphor Bronze	Au-Plated
②	CONTACT FOOT #2	1	Phosphor Bronze	Au-Plated
①	CONTACT FOOT #1	1	Phosphor Bronze	Au-Plated

ITEM NO.	DESCRIPTION	DRAWN	DATE

KSD SWITCH CONNECTOR 全球互联零组件制造企业
科斯达电子科技有限公司
KSD ELECTRONIC TECHNOLOGY CO., LTD

TOLERANCE UNLESS OTHERWISE STATED: Up to 5 ±0.2; Above 5 ~ 15 ±0.3; Above 15 ~ 30 ±0.4; Above 30 ~ 50 ±0.5; Angle ±0.3°

3RD. ANGEL'S | UNITS MM

DRAWN BY: Jack Lu	DATE 09/30/21	MAT'L	
CHECKED BY: Jacky Chen	DATE 09/30/21	FINISH	
APPROVED BY: Tony Kao	DATE 09/30/21	SCALE	1 : 1
		SHEET NO.	1 of 1

TITLE	JACK
MODLE	PHONE JACK
DWG NO.	PJ-2866D-3-S124
PART NO.	PJ-2866D-3-S124
SIZE	A4
VER	R