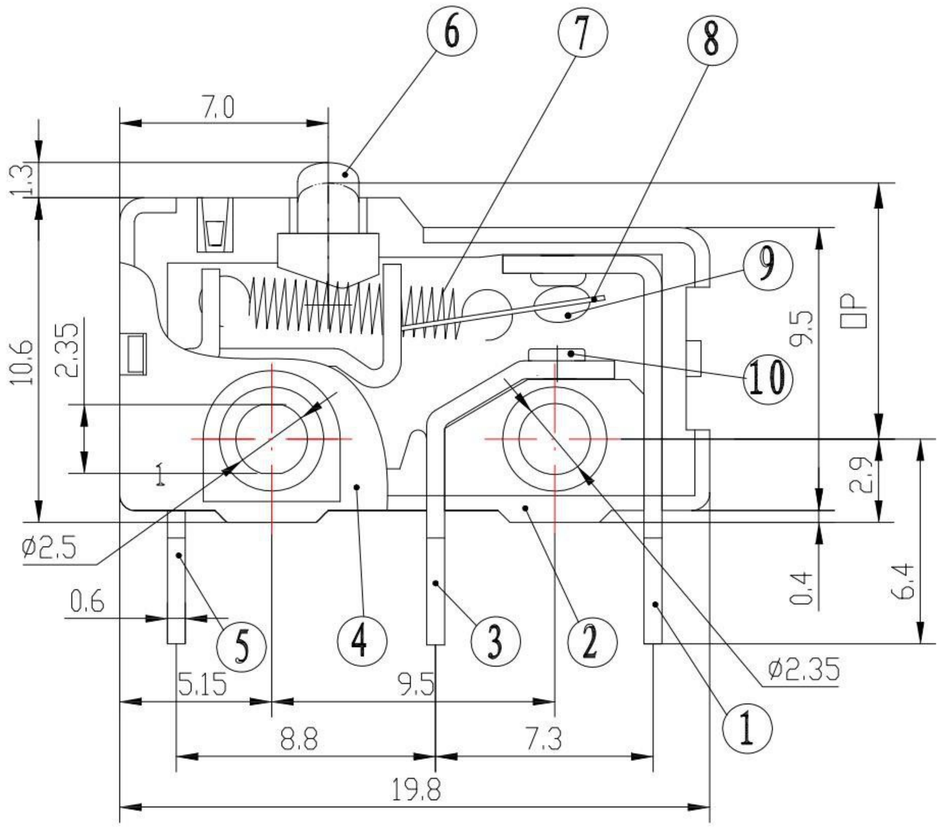

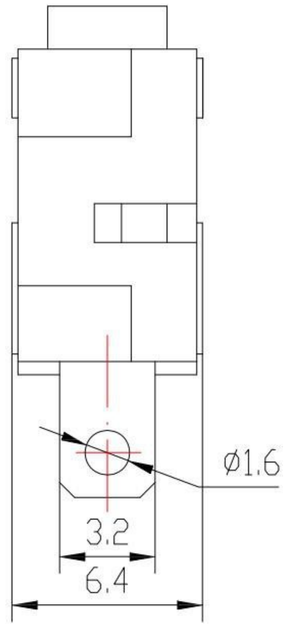

1. SPECIFICATION.	
1.1 Ratings Temperature Electronical Life	10(3)A 125 / 250 VAC 25T125 1E4 50-60Hz IP40
	10GPA 125 / 250 VAC 1/ 2hp 250VAC 25T125 1E4 50-60Hz IP40
	4A 30 VDC 25T125 1E4 IP40
1.2 Contact resistance	50 mΩ Max
1.3 Insulation resistance	100 MΩ Min
1.4 Dielectric withstanding voltage	AC 1000V / 1500V
1.5 Operating force	2.5 N Max
1.6 **Operating Position**	8.4 ± 0.4 mm
2. MATERIAL.	
2.1 NC Terminal	Brass , Ag Plated
2.2 CASE	PBT , Black
2.3 NO Terminal	Brass , Ag Plated
2.4 Cover	PBT , Black
2.5 Terminal	Brass , Ag Plated
2.6 Plunger	PPS
2.7 Pull spring	Stainless
2.8 Moving piece	Tin Brass
2.9 Contact point	Ag Plated over Nickel
2.10 Contact point	Ag Plated over Nickel
3. SAFETY AUTHENTICATION.	

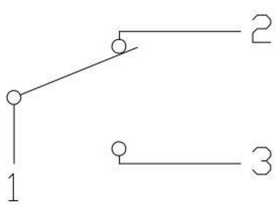

SCHEMATIC

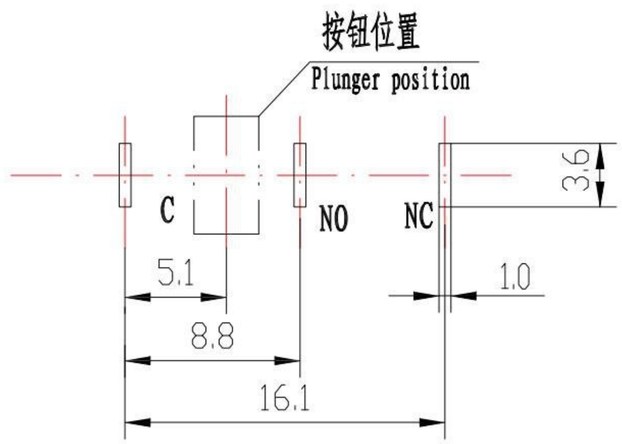

PCB LAYOUT

ITEM NO.	DESCRIPTION	DRAWN	DATE
1	新增PCB LAYOUT	Jack	033115

KSD SWITCH CONNECTOR 全球互联零组件制造企业 科斯达电子科技有限公司 KSD ELECTRONIC TECHNOLOGY CO., LTD

TOLERANCE UNLESS OTHERWISE STATED : Up to 5 ±0.2; Above 5 ~ 15 ±0.3; Above 15 ~ 30 ±0.4; Above 30 ~ 50 ±0.5; Angle ±0.3°

3RD. ANGEL'S | UNITS MM

DRAWN BY: Jack Lu	DATE 03/31/15	MAT'L	
CHECKED BY: Jacky Chen	DATE 03/31/15	FINISH	
APPROVED BY: Tony Kao	DATE 03/31/15	SCALE 1 : 1	SHEET NO. 1 of 1

TITLE	SWITCH		
MODLE	MICRO SWITCH		
DWG NO.	SM10-00N-250-S146	SIZE	A4
PART NO.	SM10-00N-250-S146	VER	R1