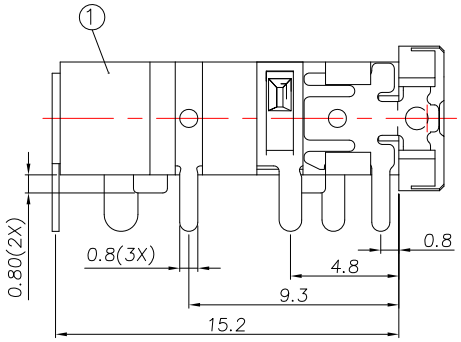

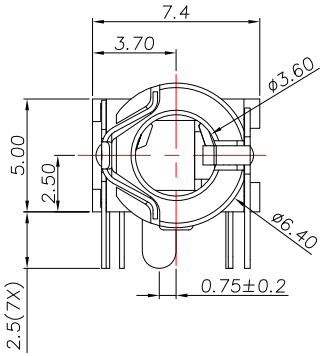

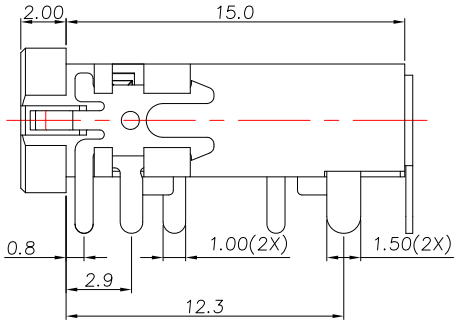

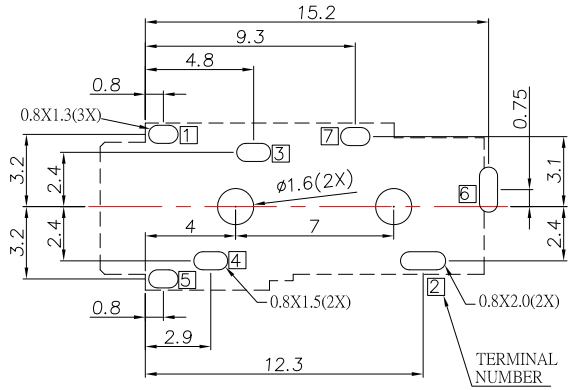

P.C.B LAYOUT
TOP VIEW

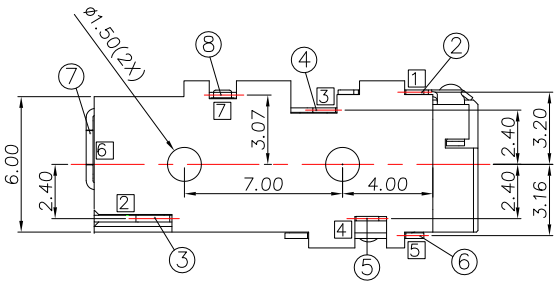

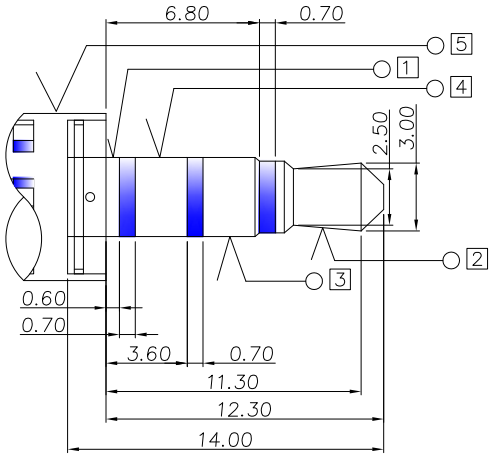

MODEL NO.	PJ-3827	PJ-3825
SCHEMATIC	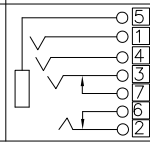	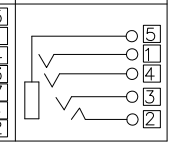

SPECIFICATION

1.Rating ：DC 12V, 1.0A；
2.Contact resistance：≤50mΩ；
3.Insulation resistance：≥100MΩ；
4.Withstand voltage：500VAC ；
5.Insertion and extraction force：3-30N;
6.life test：5,000 cycles。

NO.	DESCRIPTION	QTY	MATERIAL	REMARK
⑧	Make terminal 7	1	Phosphor Bronze	Gold flash on contact area, gold flash plated on solder tail Area, all over nickel plated
⑦	Make terminal 6	1	Phosphor Bronze	
⑥	Transfer Spring 5	1	Phosphor Bronze	
⑤	Ring spring 4	1	Phosphor Bronze	
④	Ring spring 3	1	Phosphor Bronze	
③	Tip spring 2	1	Phosphor Bronze	
②	Earth spring 1	1	Phosphor Bronze	
①	Housing	1	PA10T	Black

ITEM NO.	DESCRIPTION	DRAWN	DATE

广东科斯达电子科技有限公司
GUANG DONG KE SI DA ELECTRONIC TECHNOLOGY CO., LTD.

TOLERANCE UNLESS OTHERWISE STATED：
Up to 5 ±0.2
Above 5 ~ 15 ±0.3
Above 15 ~ 30 ±0.4
Above 30 ~ 50 ±0.5
Angle ±0.3°

3RD. ANGEL'S | UNITS | MM

DRAWN BY: Jack Lu	DATE 06/29/23	MAT'L	
CHECKED BY: Jacky Chen	DATE 06/29/23	FINISH	
APPROVED BY: Tony Kao	DATE 06/29/23	SCALE	1 : 1
		SHEET NO.	1 of 1

TITLE	JACK		
MODLE	PHONE JACK		
DWG NO.	PJ-382x-S458	SIZE	A4
PART NO.	PJ-382x-S458	VER	R