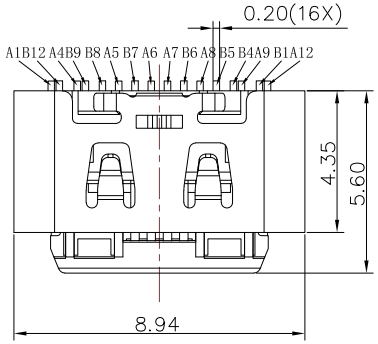

SBC-160S21-20x-S175

鍍層厚度：

Blank : 1u"
2 : 15u"
3 : 30u"

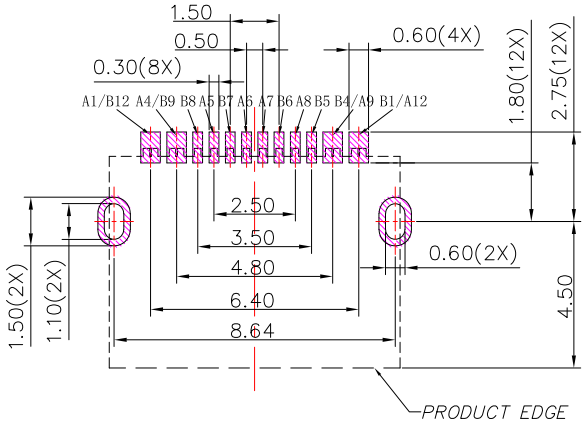

P.C.B. LAYOUT

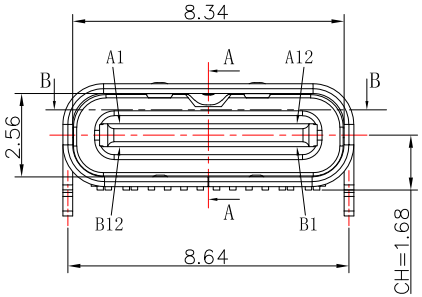

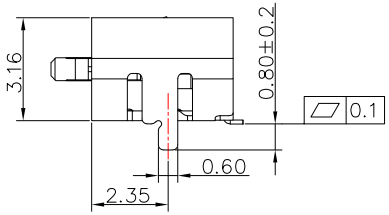

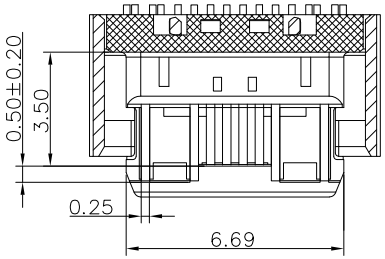

SECTION B-B

SCALE 1:1

USB TYPE C PIN ASSIGNMENTS

PIN NUMBER	SIGNAL NAME	PIN NUMBER	SIGNAL NAME
A1	GND	B12	GND
A4	VBUS	B9	VBUS
A5	CC1	B8	SUB2
A6	Dp1	B7	Dn2
A7	Dn1	B6	Dp2
A8	SBU1	B5	CC2
A9	VBUS	B4	VBUS
A12	GND	B1	GND

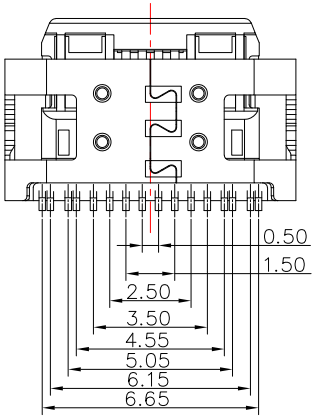

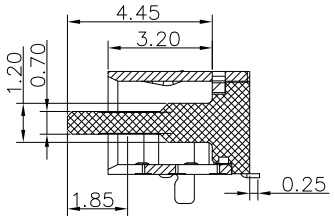

SECTION A-A

SCALE 1:1

SPECIFICATIONS

Electrical:

1.Rating: 5.0 V , 5.0 A

2.Dielectric Withstand Voltage: 100V AC

3.Contact Resistance: 40 mΩ Max

4.Insulation Resistance: 100 MΩ Min

Mechanical:

1.Connector Mate and Unmate Force

1.1 Mate force: 5~20 N

1.2 Unmate force: 8~20 N

Material:

1.Housing: PA9T

2.Contact: C18400

3.Shell: SUS

Finish:

1.Contact: Plated Gold in Mating Area ;
Gold Plated on Solder Balls ;
Nickel under plated overall

2.Shell: Nickel under Plated surface layer

ITEM NO.	DESCRIPTION	DRAWN	DATE

广东科斯达电子科技有限公司
GUANG DONG KE SI DA ELECTRONIC TECHNOLOGY CO., LTD.

TOLERANCE UNLESS OTHERWISE STATED : Up to 5 ±0.2; Above 5 ~ 15 ±0.3; Above 15 ~ 30 ±0.4; Above 30 ~ 50 ±0.5; Angle ±0.3°

3RD. ANGEL'S | UNITS | MM

DRAWN BY: Jack Lu	DATE 12/24/24	MAT'L		TITLE	CONNECTOR
CHECKED BY: Jacky Chen	DATE 12/24/24	FINISH		MODLE	USB C TYPE 2.0 Female SMT 16PIN L5.6 CH1.68帶彈片
APPROVED BY: Tony Kao	DATE 12/24/24	SCALE	1 : 1	DWG NO.	SBC-160S21-20x-S175
		SHEET NO.	1 of 1	PART NO.	SBC-160S21-20x-S175

SIZE A4 | VER R